ZF4HP22 /24

RWD 4 Speed

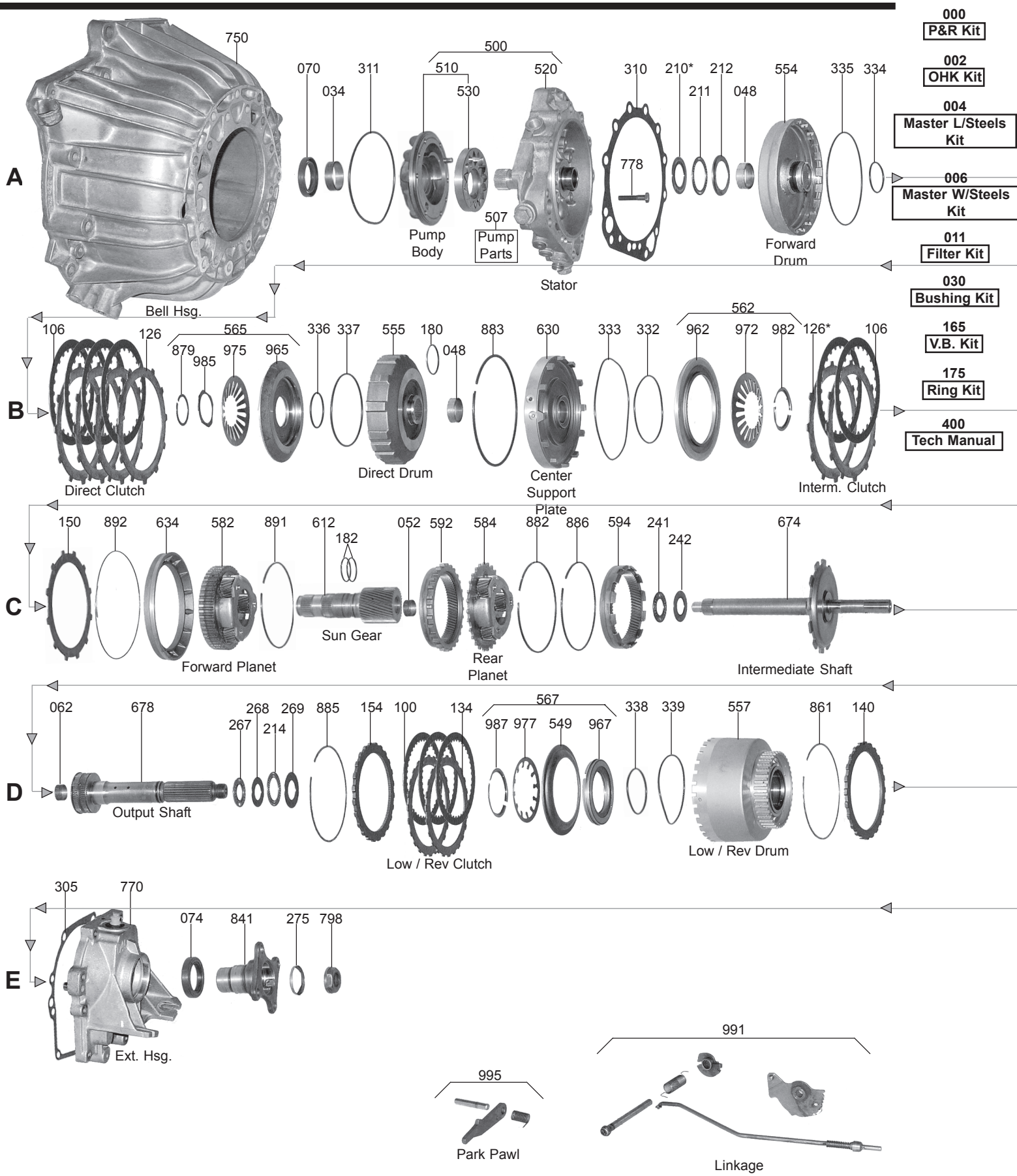

000 P&R Kit
002 OHK Kit
004 Master L/Steels Kit
006 Master W/Steels Kit
011 Filter Kit
030 Bushing Kit
165 V.B. Kit
175 Ring Kit
400 Tech Manual

© WIT

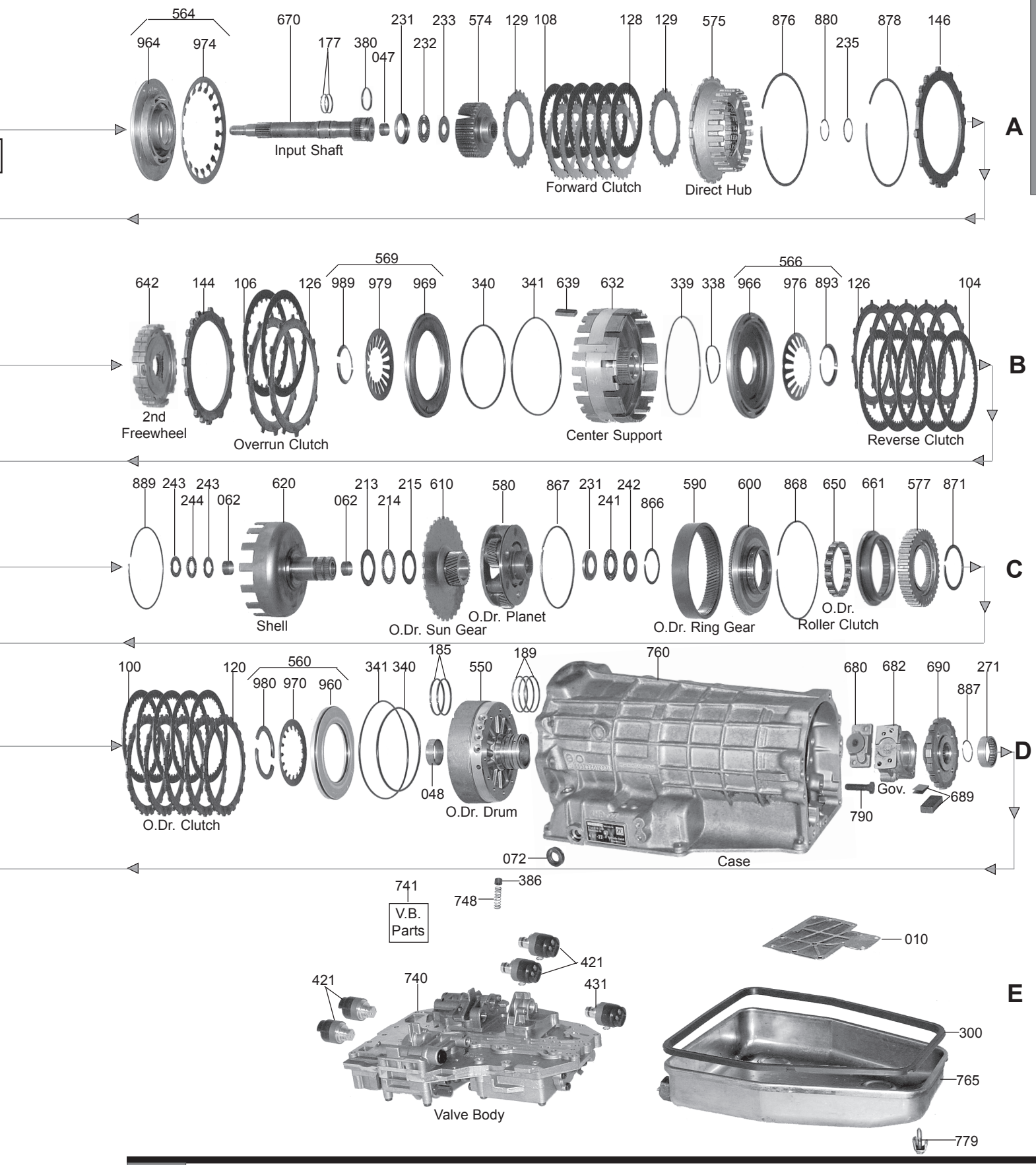
564
964
974
670
177
380
047
231
232
233
574
129
108
128
129
575
876
880
235
878
146
Input Shaft
Forward Clutch
Direct Hub
A
569
642
144
106
126
989
979
969
340
341
639
632
339
338
566
966
976
893
126
104
2nd Freewheel
Overrun Clutch
Center Support
Reverse Clutch
B
889
243
244
243
062
620
062
213
214
215
610
580
867
231
241
242
866
590
600
868
650
661
577
871
Shell
O.Dr. Sun Gear
O.Dr. Planet
O.Dr. Ring Gear
O.Dr. Roller Clutch
C
100
120
560
980
970
960
341
340
185
550
189
760
680
682
690
887
271
048
O.Dr. Clutch
O.Dr. Drum
Gov.
689
790
072
Case
D
741
V.B. Parts
748
386
421
421
740
431
010
Valve Body
300
765
779
E

© WIT