ATX

FWD 3 Speed

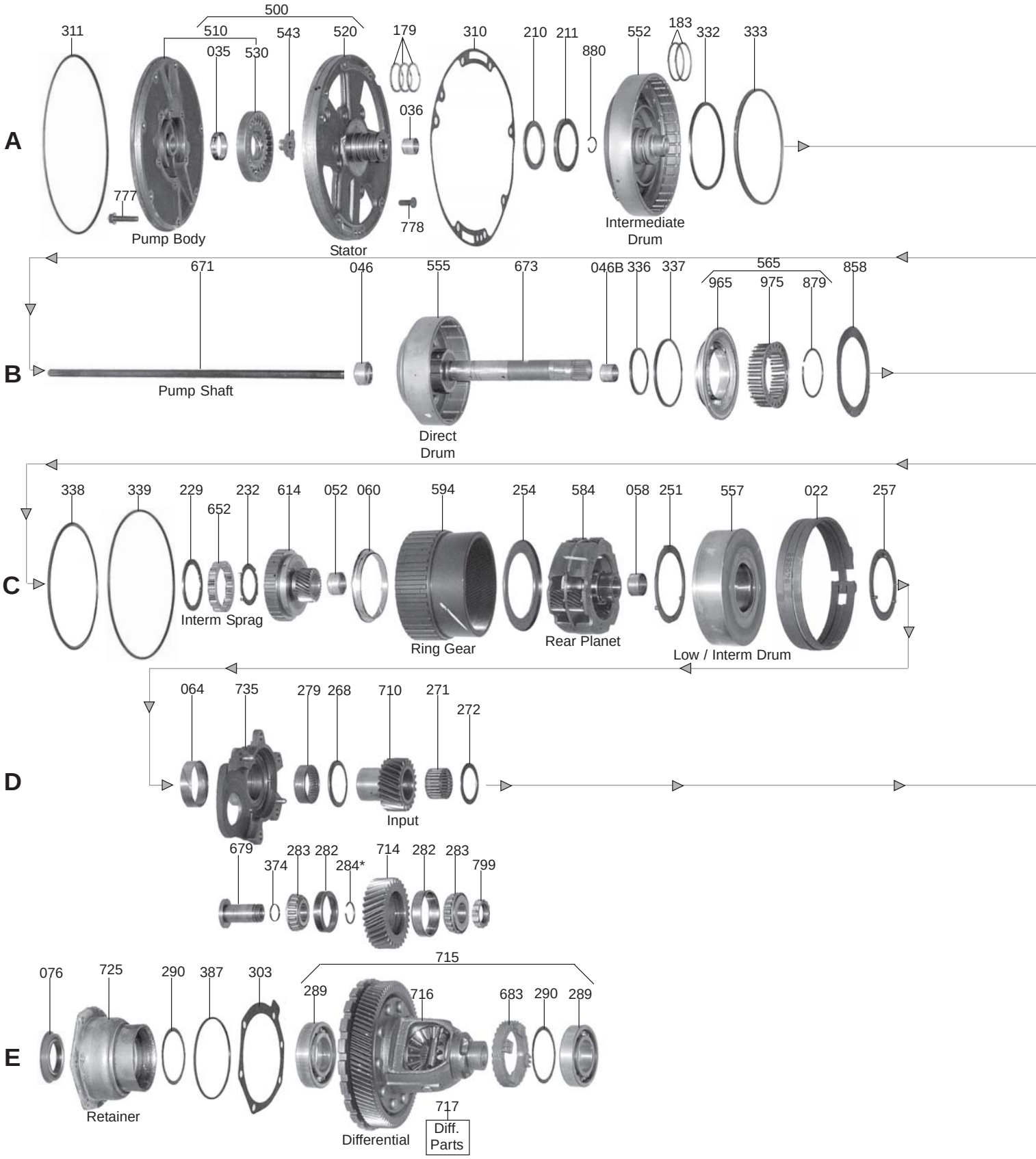

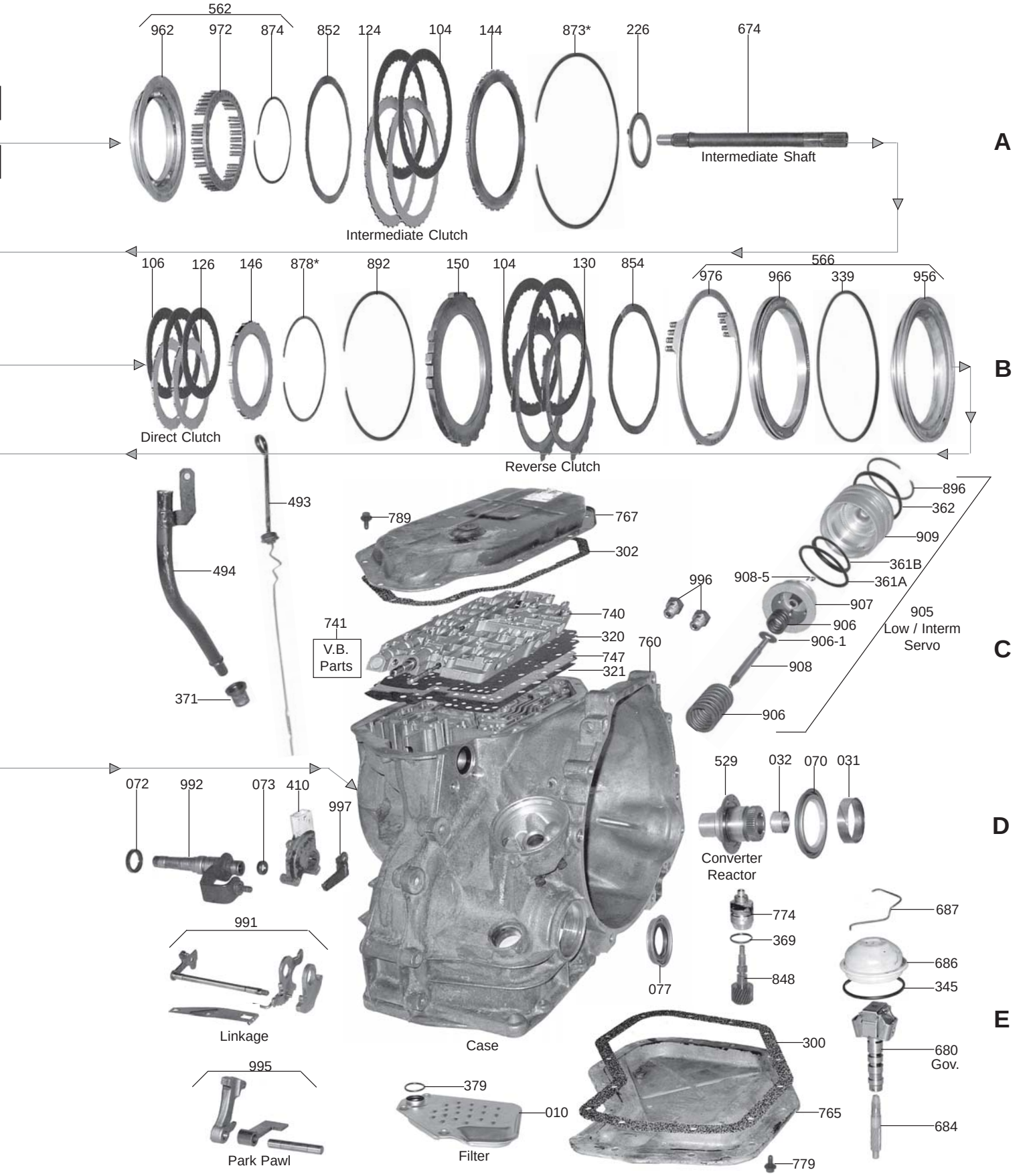
562
962
972
874
852
124
104
144
873*
226
674
Intermediate Shaft
A
Intermediate Clutch
106
126
146
878*
892
150
104
130
854
566
976
966
339
956
B
Direct Clutch
Reverse Clutch
493
494
371
789
767
302
741
V.B. Parts
740
320
747
321
760
996
908-5
896
362
909
361B
361A
907
906
906-1
908
906
905
Low / Interm Servo
C
072
992
073
410
997
529
032
070
031
D
Converter Reactor
991
Linkage
995
Park Pawl
Case
077
774
369
848
687
686
345
680
Gov.
684
E
300
765
779
379
010
Filter