# 3L30 (180 / 180C)

RWD 3 Speed

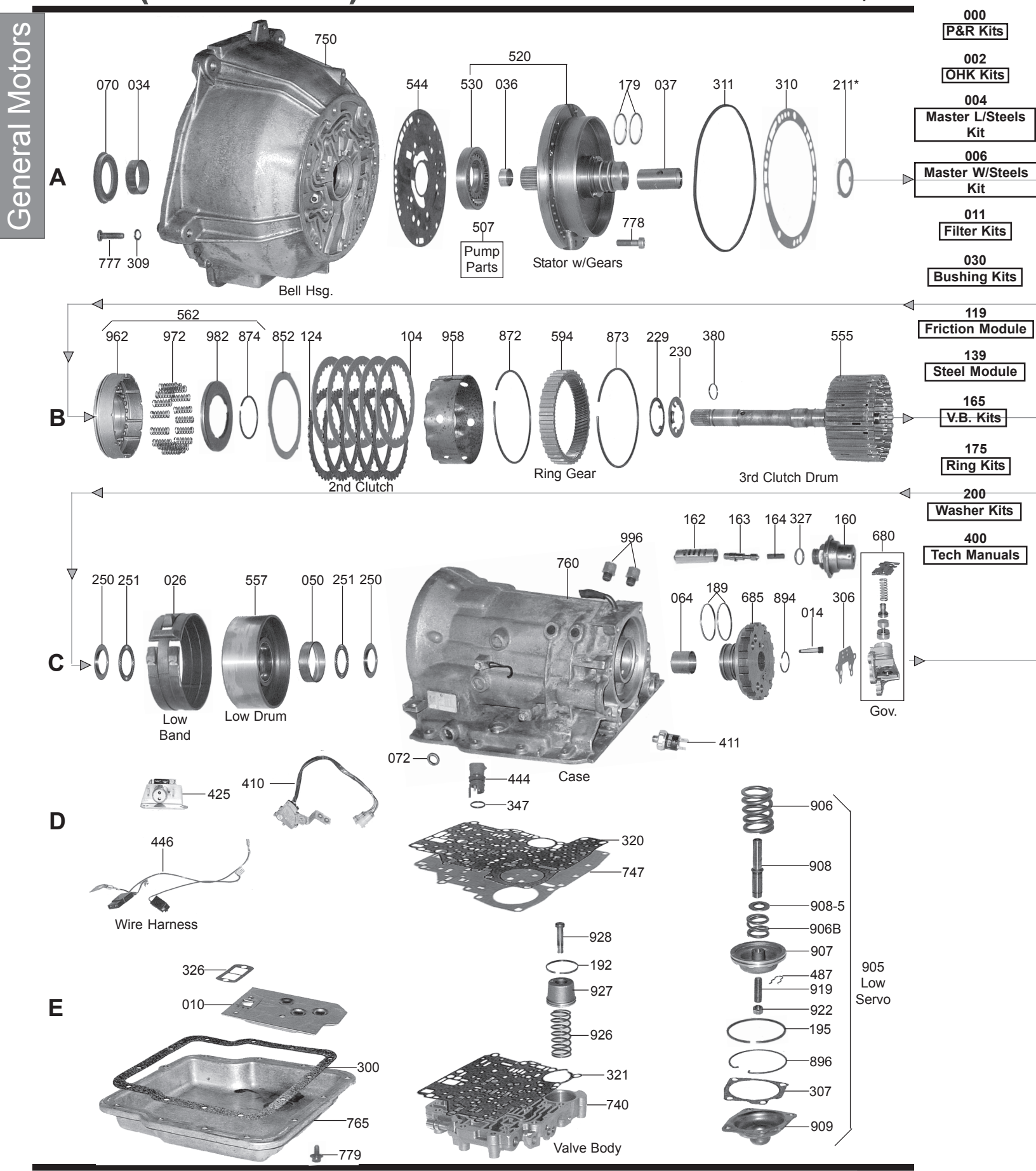


© WIT

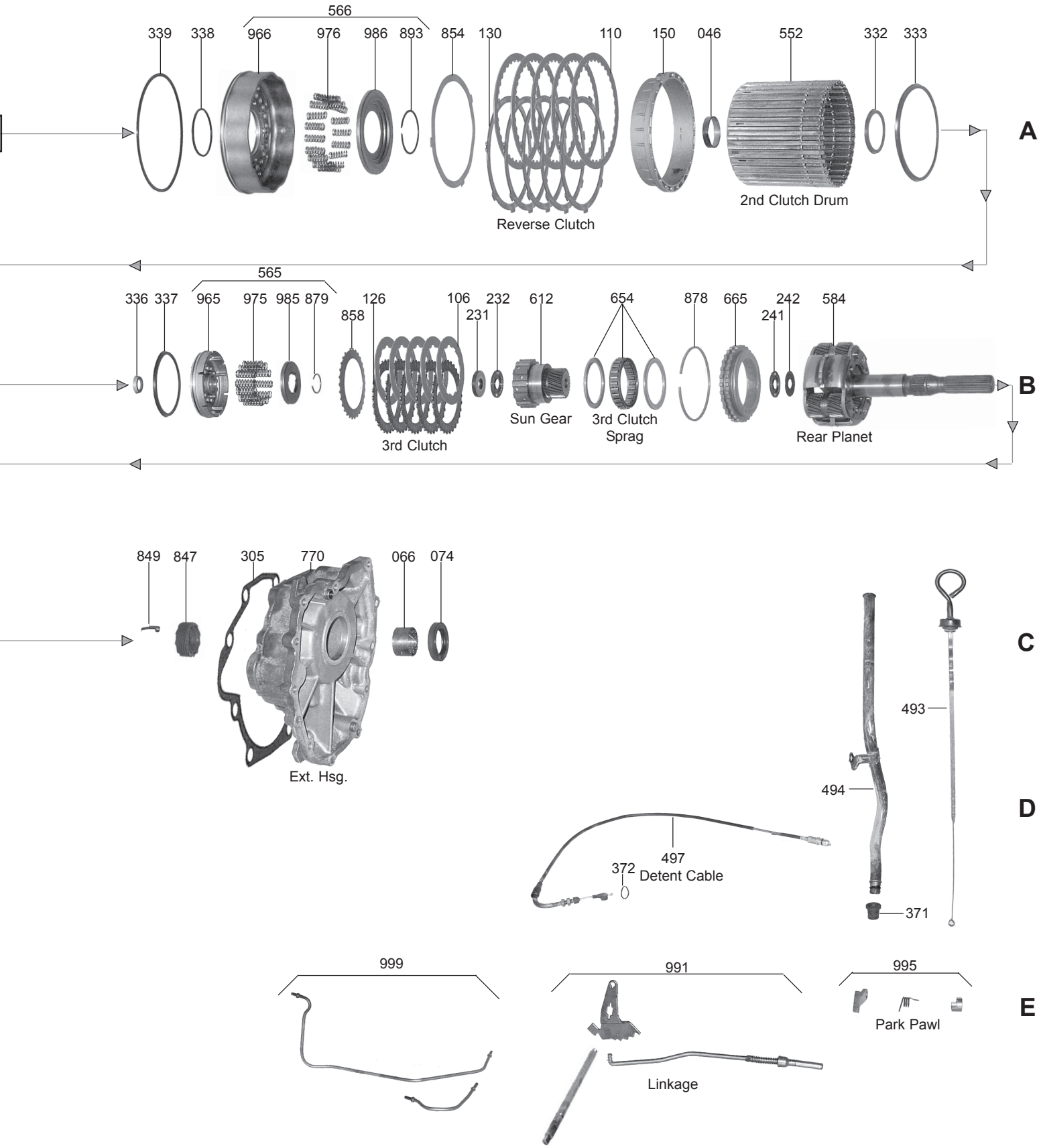
566
339
338
966
976
986
893
854
130
110
150
046
552
332
333
A
Reverse Clutch
2nd Clutch Drum
565
336
337
965
975
985
879
858
126
106
231
232
612
654
878
665
241
242
584
B
3rd Clutch
Sun Gear
3rd Clutch
Sprag
Rear Planet
849
847
305
770
066
074
C
Ext. Hsg.
493
494
D
497
372
Detent Cable
371
999
991
995
E
Park Pawl
Linkage



© WIT