45RFE / 5-45RFE

RWD 4 & 5 Speed

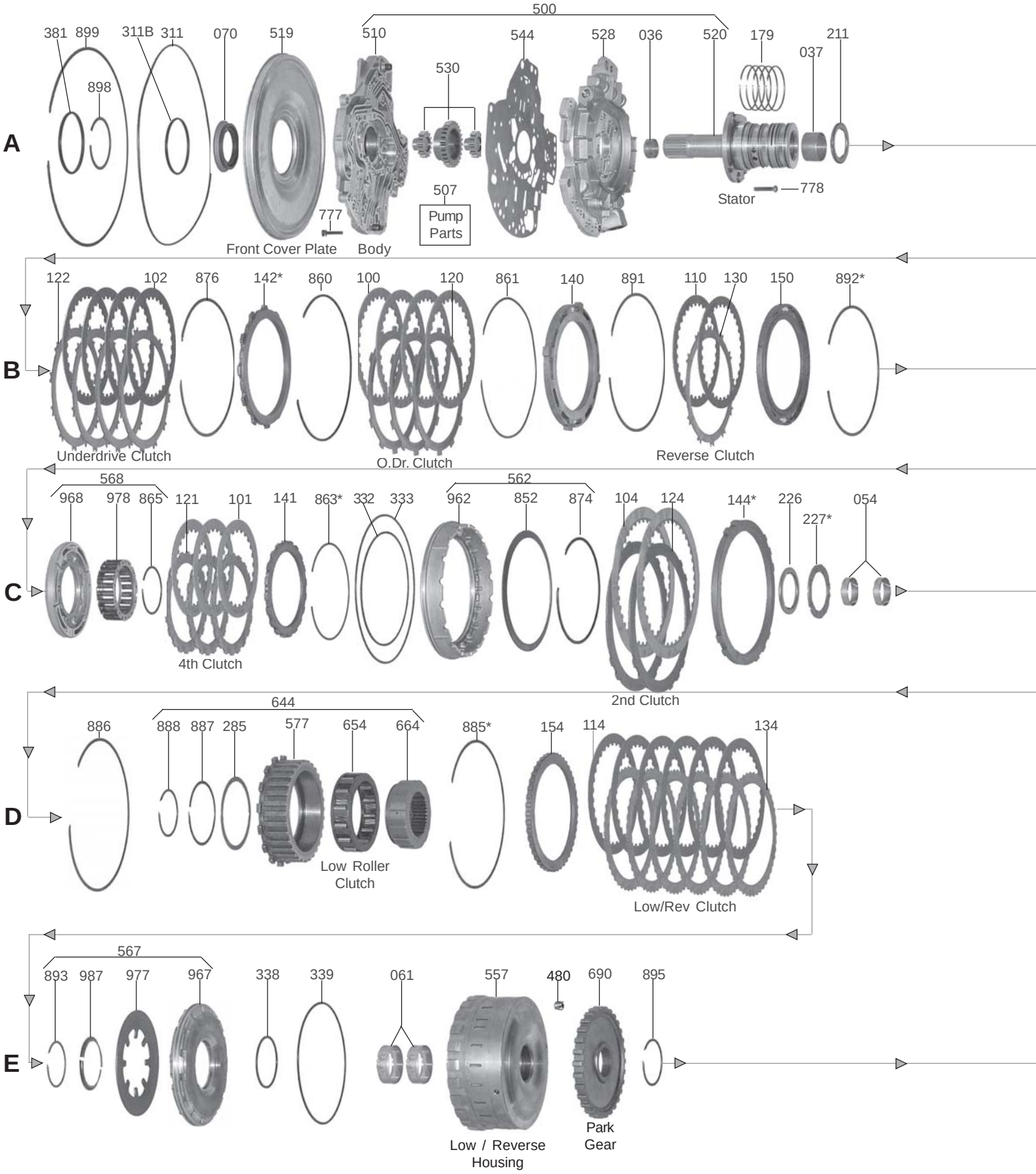

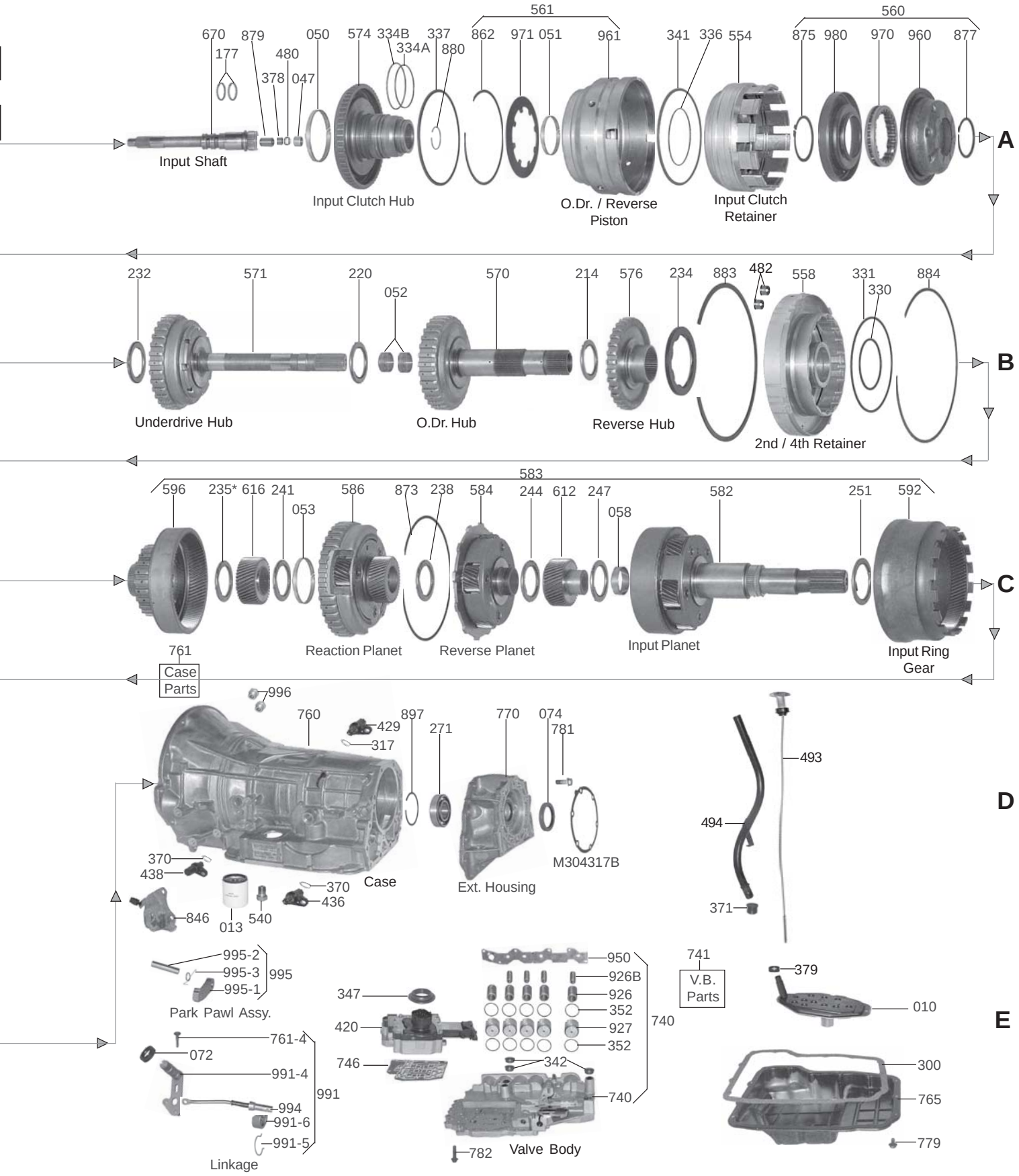
A
670 879 050 574 334B 337 862 971 051 961 341 336 554 875 980 970 960 877
177 480 378 047 334A 880
561
560
Input Shaft
Input Clutch Hub
O.Dr. / Reverse Piston
Input Clutch Retainer
B
232 571 220 052 570 214 576 234 883 482 558 331 330 884
Underdrive Hub
O.Dr. Hub
Reverse Hub
2nd / 4th Retainer
C
583
596 235* 616 241 053 586 873 238 584 244 612 247 058 582 251 592
761
Case Parts
Reaction Planet
Reverse Planet
Input Planet
Input Ring Gear
D
996 760 429 317 897 271 770 074 781 493 494 371
370 438 846 013 540 370 436
Case
Ext. Housing
M304317B
E
995-2 995-3 995-1 995
Park Pawl Assy.
347 420 746
950 926B 926 352 927 352 740
741
V.B. Parts
379 010
761-4 072 991-4 994 991-6 991-5 991
Linkage
342 740 782
Valve Body
300 765 779